THIS COPY IS PROVIDED ON A RESTRICTED BASIS AND IS NOT TO BE USED IN ANY WAY DETRIMENTAL TO THE INTERESTS OF PANDUIT CORP.

NOTES:
1. VISIT OUR ON-LINE CATALOG AT WWW.PANDUIT.COM FOR A LIST OF CURRENT PARTS APPLICABLE FOR USE WITH THIS PRODUCT.
2. DIMENSIONS IN [ ] ARE METRIC.
3. ALL MATERIALS AND COMPONENTS USED MEET THE MATERIAL RESTRICTIONS OF RoHS (EUROPEAN DIRECTIVE 2011/65/EU ON THE RESTRICTION OF HAZARDOUS SUBSTANCES) AS PROPOSED BY THE RoHS TECHNICAL ADAPTATION COMMITEE.
4. PART INCLUDES: 2 BRACKETS

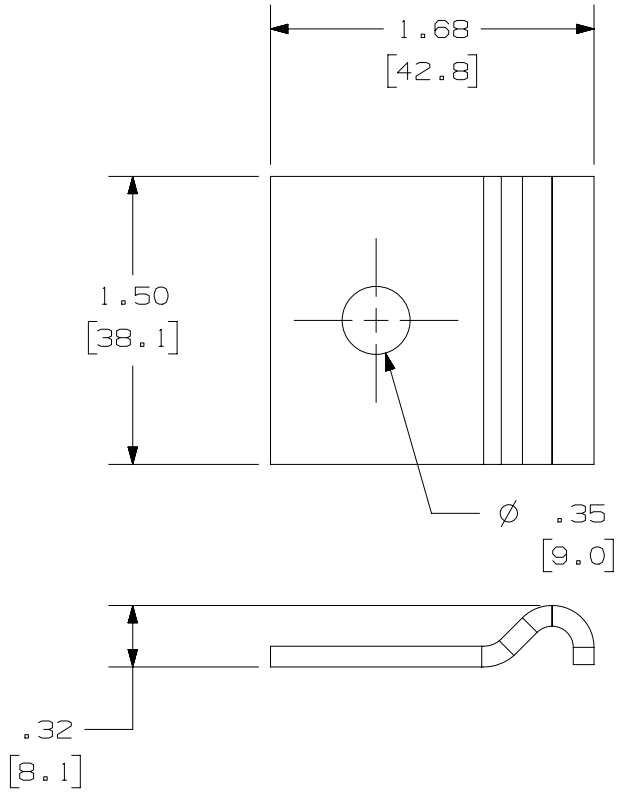

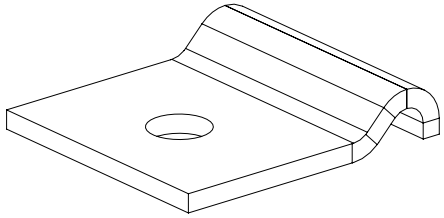

REV	DATE	BY	CHK	APR	DESCRIPTION	ECN
00A	3/22/21	JSP	DWW	ML	INITIAL RELEASE	00510JSZ-DC

PART NUMBER: PWBWMBV**

TITLE: PANDUIT WIRE BASKET VERTICAL WALL MOUNT BRACKET

CUSTOMER DRAWING

ITEM REVISION NAME: 00510JSZ/00

DATASET FILE NAME: 00510JSZ_DC/00A

THIRD ANGLE PROJECTION

MATERIAL: C.R.S.

DRAWING NUMBER: 00510JSZ-DC

DRAWN BY	DATE	CHK	SCALE	SHEET	SIZE
JSP	3/22/21	DWW	NONE	SHEET 1 OF 1	A

A-SIZE CUSTOMER